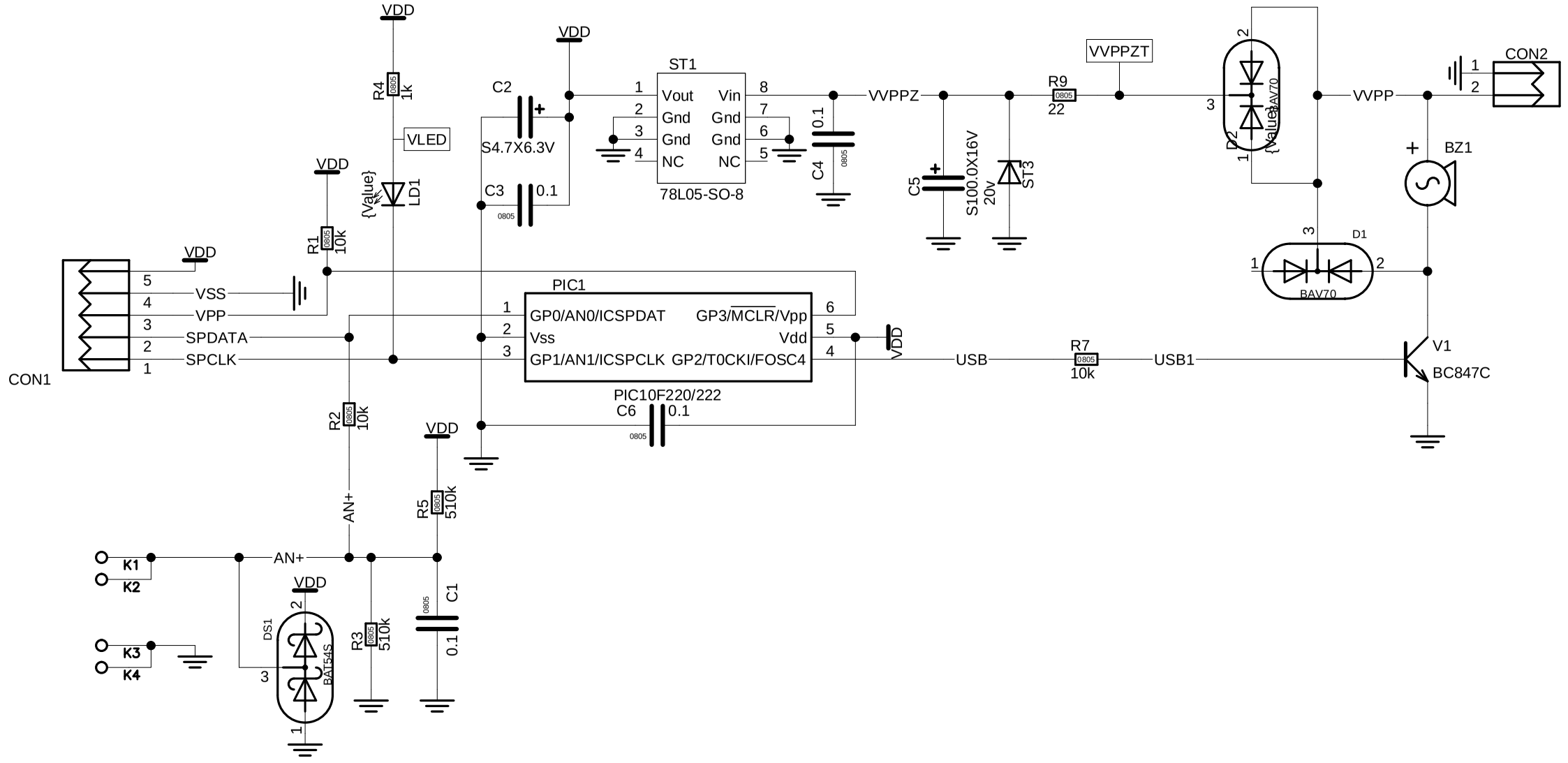
VDD
R4
1k
VLED
{Value}
LD1
R1
10k
C2
S4.7X6.3V
C3
0.1
ST1
Vout
Gnd
Gnd
NC
Vin
Gnd
Gnd
NC
78L05-SO-8
C4
0.1
VVPPZ
C5
S100.0X16V
20v
ST3
R9
22
VVPPZT
D2
BAV70
{Value}
VVPP
CON2
BZ1
D1
BAV70
CON1
VSS
VPP
SPDATA
SPCLK
PIC1
GP0/AN0/ICSPDAT
Vss
GP1/AN1/ICSPCLK
GP3/MCLR/Vpp
Vdd
GP2/T0CKI/FOSC4
PIC10F220/222
C6
0.1
USB
R7
10k
USB1
V1
BC847C
R2
10k
R5
510k
AN+
K1
K2
K3
K4
DS1
BAT54S
R3
510k
C1
0.1